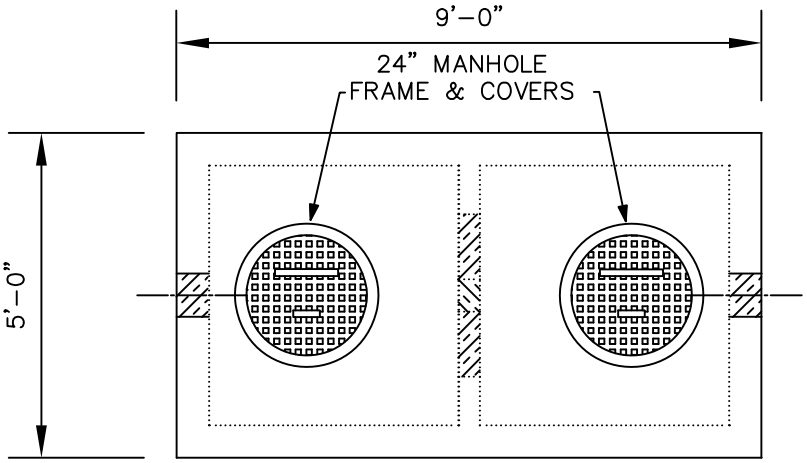

PLAN VIEW

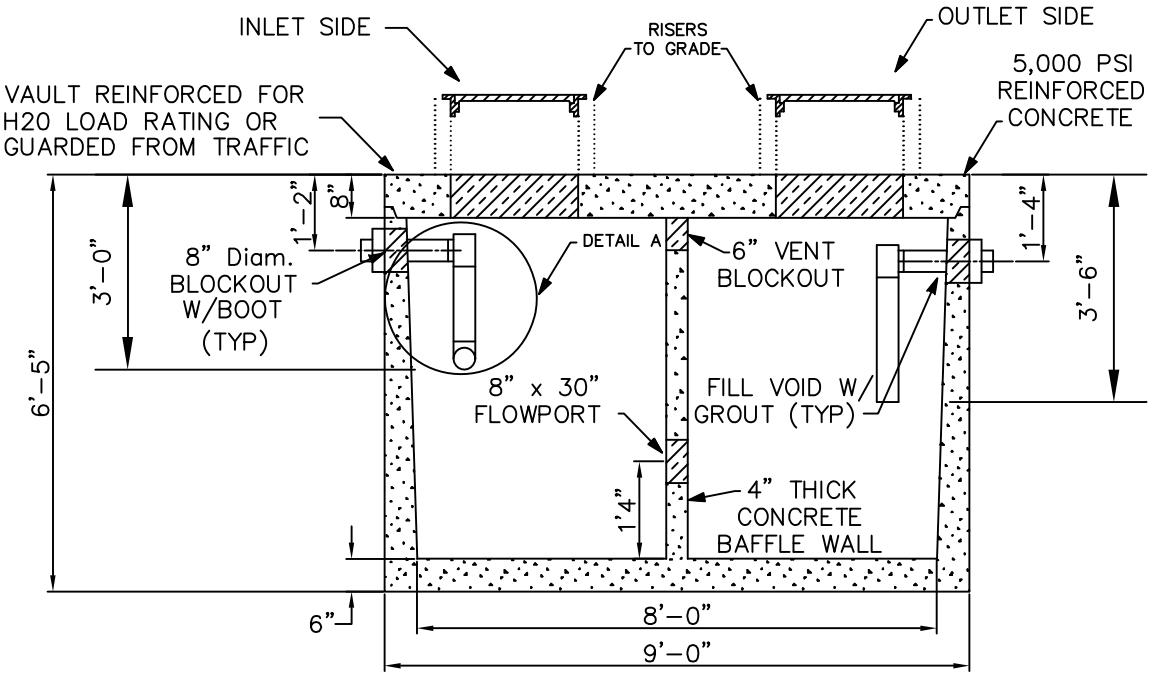

SECTION VIEW

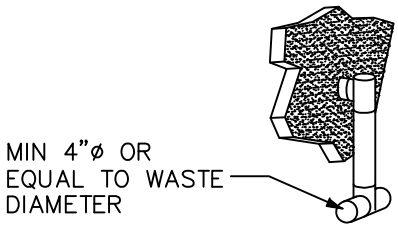

DETAIL A

NOTES:

1. MANHOLE FRAMES SHALL BE INSTALLED ABOVE GRADE
2. SITE SHALL BE GRADED TO PREVENT PONDING
3. ALL WETTED PORTIONS SHALL BE MONOLITHICALLY CAST
4. STRUCTURAL DESIGN AND INSTALLATION REQUIREMENTS ARE THE RESPONSIBILITY OF THE MANUFACTURER
5. THE INLET & OUTLET "TEES" SHALL BE INSTALLED AT A DISTANCE AWAY FROM THE FRONT AND BACK WALLS OF THE TANK RESPECTIVELY TO ALLOW FOR ADEQUATE VISUAL INSPECTION WHEN THE MANHOLE COVERS ARE REMOVED

SHEET: 1 OF 1	SCALE: NTS	PLAN #:	DATE: DEC 20, 2006	CHECKED BY: JTT	DESIGNED BY: JTT	DRAWN BY: JMG

REV.	DESCRIPTION	BY	DATE

1,000 GALLON GREASE TRAP
FOR WASTE FLOWS BELOW 42 GPM

PUBLIC SERVICE AUTHORITY
Henry County, Virginia
3300 KINGS MOUNTAIN ROAD
COLLINSVILLE VA, 24078